SST-10-UV

Surface Mount Series

Ultraviolet LED

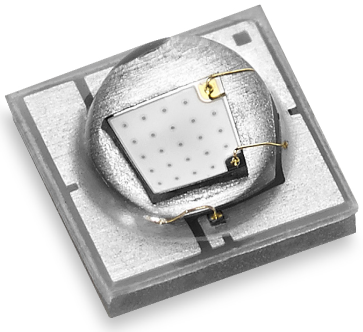

Table of Contents

SST-10 Binning Structure . . .2

Product Shipping & Labeling Information. 3

Optical and Electrical Characteristics 4

Mechanical Dimensions 6

Tape and Reel 7

Soldering Profile 8

Precautions for Use. 9

History of Changes 10

Features:

- High Power UV LED with Peak Wavelengths between 365-405nm
- Industry standard 3.5mmx3.5mm package
- 130° viewing angle at 50% Iv
- Low Thermal Resistance - 3.4 C/W
- Built-in ESD Protection
- RoHS and REACh compliant

Applications

- Curing
- Adhesives
- Inks
- Plastic Products
- Wood Finish
- Photocatalytic air/water purification
- Analytic instrumentation
- Medical
- Diagnostics
- Fluorescence Imaging

PDS-002674 Rev 01 © 2016 Luminus Devices, Inc. - All Rights Reserved

Luminus Devices, Inc. • **T** 978.528.8000 • www.luminus.com
175 New Boston Street • Woburn, MA 01801

SST-10 Binning Structure

SST-10 UV LEDs are tested for luminous flux and chromaticity at a drive current of 500mA - 20ms single pulse and placed into one of the following luminous flux (F) and chromaticity (WWW) bins:

Flux Bins - Test condition=500mA, 25ºC, 20ms pulse

Flux Bin (F)	Minimum Flux (mW)	Maximum Flux (mW)
E	720	810
F	810	900
G	900	990
H	990	1080
I	1080	1170

Wavelength Bins - Test condition=500mA, 25ºC, 20ms pulse

Wavelength Bin (WWW)	Minimum Wavelength (nm)	Maximum Wavelength (nm)
365	365	370
370	370	375
380	380	385
385	385	390
390	390	395
395	395	400
400	400	405
405	405	410

*Note: Luminus maintains a +/- 6% tolerance on flux measurements.

Ordering Information

Products	Ordering Part Number	Description
SST-10-UV-A130	SST-10-UV-A130-FWWW-NN	High Power 1-mm^2 UV LED in a 3535 surface mount package with a 130 degree molded lens

© 2016 Luminus Devices, Inc. - All Rights Reserved
Luminus Devices, Inc. • T 978.528.8000 • www.luminus.com
175 New Boston Street • Woburn, MA 01801

Part Number Nomenclature

SST	—	10	—	<C>	—	<A###>	—	<FF###>

Product Family	LED Emission Area	Color	Package Configuration	Bin kit
SST: Surface Mount Package	10: 1.0 mm^2	<C>: Color U = Ultraviolet	A130: 130-degree lens	Flux and Wavelength bin kit code - See available ordering codes below

SST-10 Bin Kit Order Codes

The following table describes the bin kit ordering codes available for the SST-10 UV LEDs. Each bin kit specifies a minimum flux as well as specific chromaticity bins allowed. Please note that within each kit a maximum flux is not specified and as a result Luminus may ship any part meeting or exceeding the minimum flux specification. Shipments will always meet the listed chromaticity bins. For information on ordering bin kits not listed below, please contact Luminus.

SST-10 UV Bin Kit Order Codes

Wavelength Range	Luminous Flux		Chromaticity Bins	Kit Number
	Bin Kit Flux Code	Min. Flux		
365	E	720	365, 370	E365-00
385	G	900	380, 385	G385-00
395	G	900	390, 395	G395-00
405	F	810	400, 405	F405-00

Product Shipping & Labeling Information

All SST-10 products are packaged and labeled with their respective bin as outlined in the tables on pages 2 & 3. Each reel will only contain one bin.

SST-10 UV

SST	—	10	—	UV	—	AXXX	—	FWWW

Product Family	LED Emission Area	Color	Package Configuration	Bin kit
SST: Surface Mount Package	10: 1.0 mm^2	Color	A130: 130-degree lens	Flux and Chromaticity bin kit code as outlined above

© 2016 Luminus Devices, Inc. - All Rights Reserved
Luminus Devices, Inc. • T 978.528.8000 • www.luminus.com
175 New Boston Street • Woburn, MA 01801

Optical and Electrical Characteristics

Optical and Electrical Characteristics at 500mA

Parameter	Symbol	Package Type				Unit
		A130-365	A130-385	A130-395	A130-405	
Forward Current[2]	I_f	500	500	500	500	mA
Maximum Current	I_{max}	1000	1000	1000	1000	mA
Output Power Typical	Φ_r	875	1015	1015	930	mW
min Voltage	V_{min}	3.0	3.0	3.0	3.0	V
Forward Voltage Typ.	V_f	3.6	3.4	3.4	3.4	V
max Voltage	V_{max}	4.0	4.0	4.0	4.0	V
Viewing Angle	$2\,Ø_{1/2}$	120	120	120	120	degrees
Peak Wavelength Typ.	λ_P	365	385	395	405	nm
FWHM at 50% of Φ	$\Delta\lambda_{1/2}$	10	10	10	10	nm
Thermal Res. (Electrical)	R_{TH}	2.3	2.3	2.3	2.3	°C/W

Note 1: Ratings are based on operation at a constant junction temperature of $T_j = 25°C$.

Note 2: To prevent damage, please refer to operating conditions and derating curves for appropriate maximum operating conditions

Note 3: Maximum operating case temperature combined with maximum drive current defines the total maximum operating condition for the device. To prevent damage, please follow derating curves for all operating conditions.

Note 4: Luminus SST-10-UV LEDs are designed for operation up to an absolute maximum forward drive current as specified above. Product lifetime data is specified at typical forward drive currents. Sustained operation at absolute maximum currents will result in a reduction of device lifetime compared to typical forward drive currents. Actual device lifetimes will also depend on junction temperature. Refer to the current vs. junction temperature derating curves for further information. In pulsed operation, rise time from 10-90% of forward current should be larger than 0.5 microseconds.

Note 5: Caution must be taken not to stare at the light emitted from these UV LEDs.

Absolute Maximum Ratings

Parameter	Symbol	Rating	Unit
Reverse Voltage	V_R	5	V
Storage Temperature	T_{STG}	-40~100	°C
Junction Temperature	T_J	100 °C	°C
Soldering Temperature	T_{SLD}	JEDEC 020 C, 260 °C	
ESD Sensitivity (HBM)	V_B	6000	V

© 2016 Luminus Devices, Inc. - All Rights Reserved
Luminus Devices, Inc. • T 978.528.8000 • www.luminus.com
175 New Boston Street • Woburn, MA 01801

Optical and Electrical Characteristics

Relative Output Flux vs. Forward Current

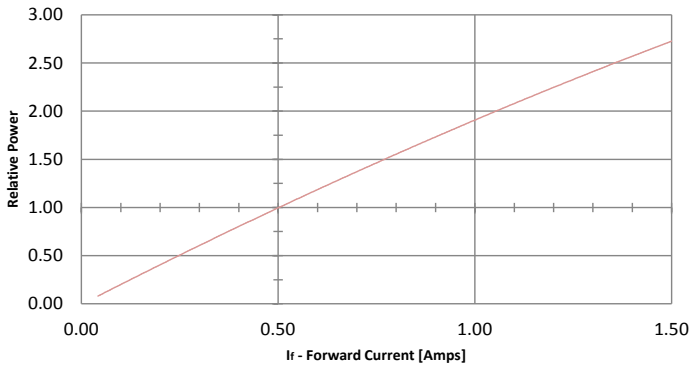

Change in Voltage vs. Forward Current

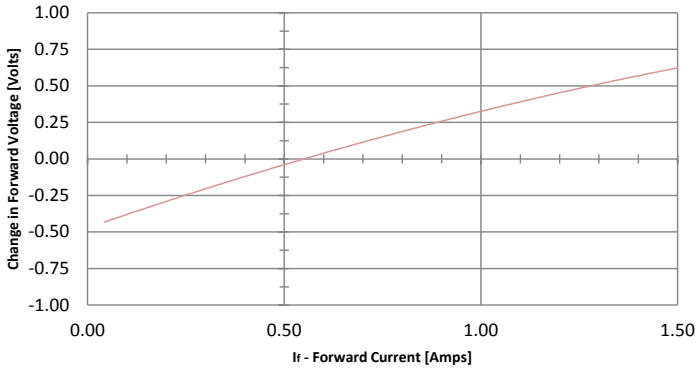

Change in Wavelength vs. Forward Current

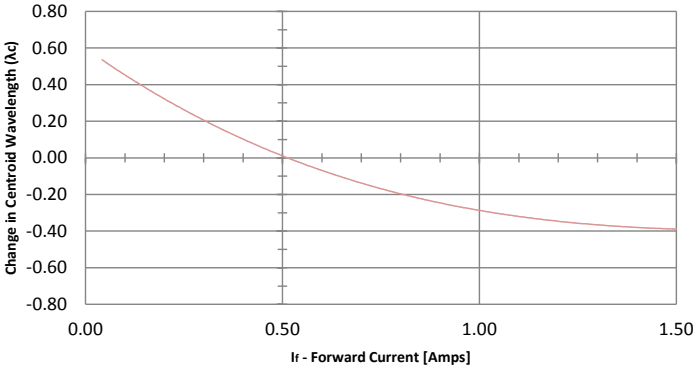

Change in FWHM vs Forward Current

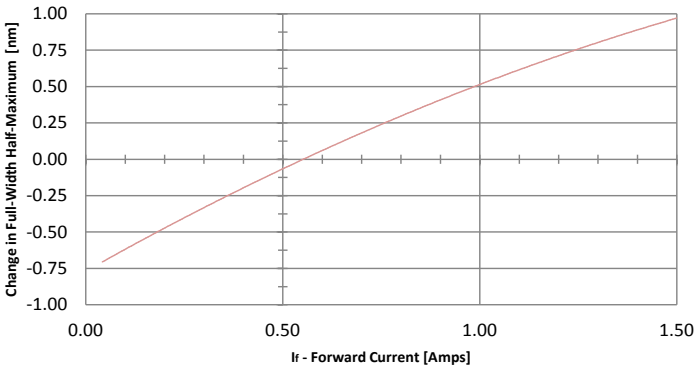

Typical Spectrum

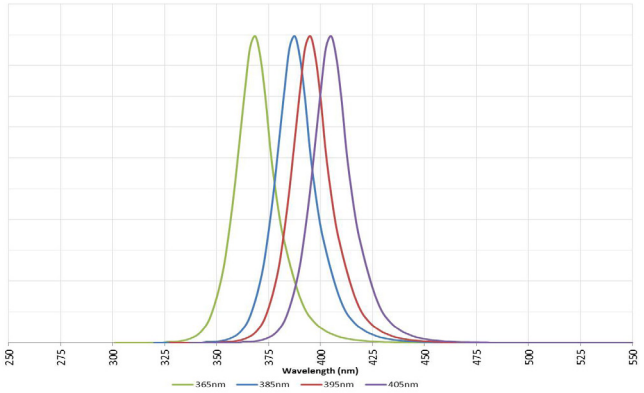

Typical Polar Radiation Plot

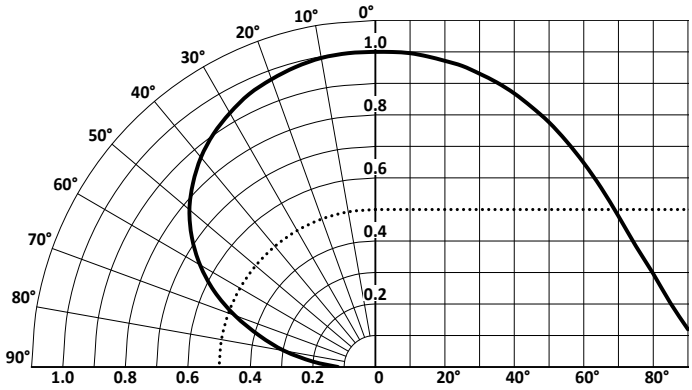

Luminus Devices, Inc. • T 978.528.8000 • www.luminus.com
175 New Boston Street • Woburn, MA 01801

 © 2016 Luminus Devices, Inc. - All Rights Reserved

Mechanical Dimensions

130-degree lens option

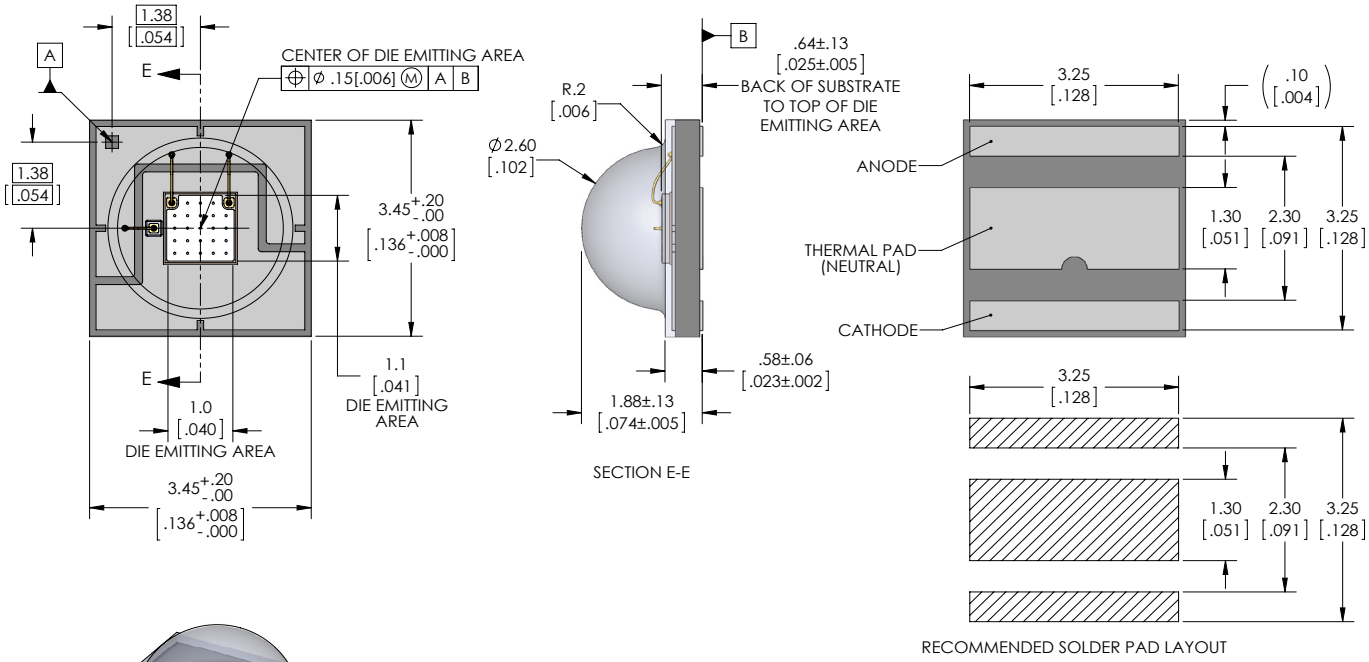

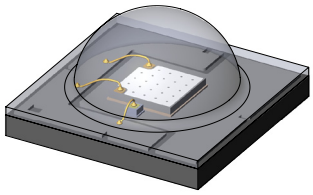

 © 2016 Luminus Devices, Inc. - All Rights Reserved

Luminus Devices, Inc. • **T** 978.528.8000 • www.luminus.com
175 New Boston Street • Woburn, MA 01801

Tape and Reel

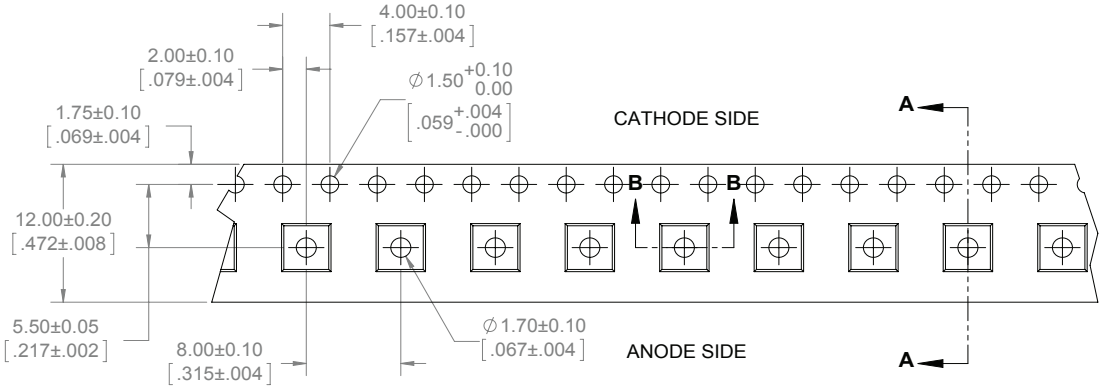

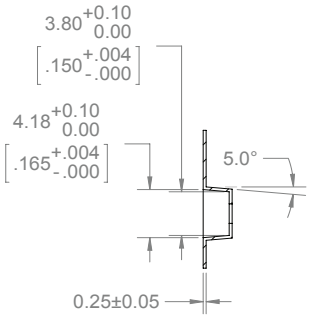

SECTION A-A

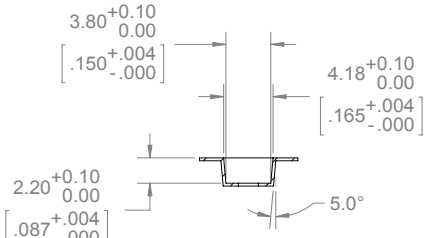

SECTION B-B

NOTES:

1. FINAL TAPE AND REEL PACKAGING MUST MEET THE REQUIREMENTS OF JEDEC-STD-033, LEVEL 2A.
2. LEAVE 304.8mm [12.00 in] OF TAPE EMPTY FOR LEAD IN (38 EMPTY POCKETS).
3. LEAVE 457.2mm [18.00 in] OF TAPE EMPTY FOR TRAILER (57 EMPTY POCKETS).
4. MUST COMPLY TO EIA-481-C-2003

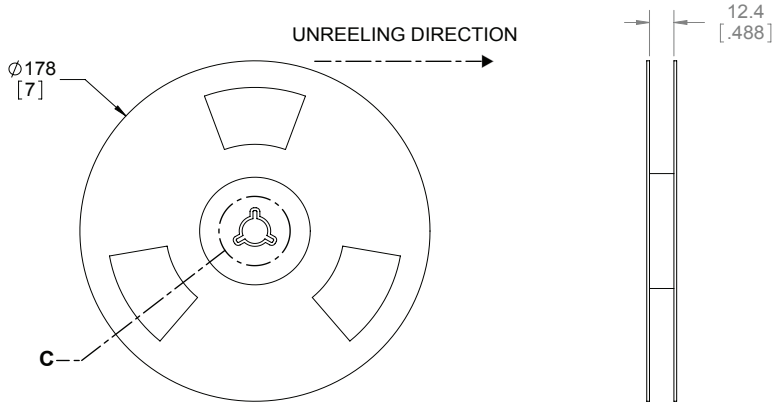

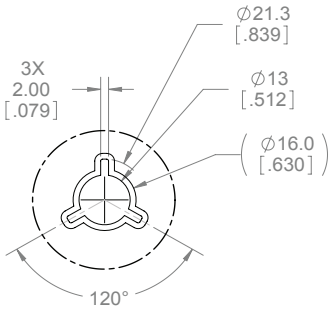

DETAIL C

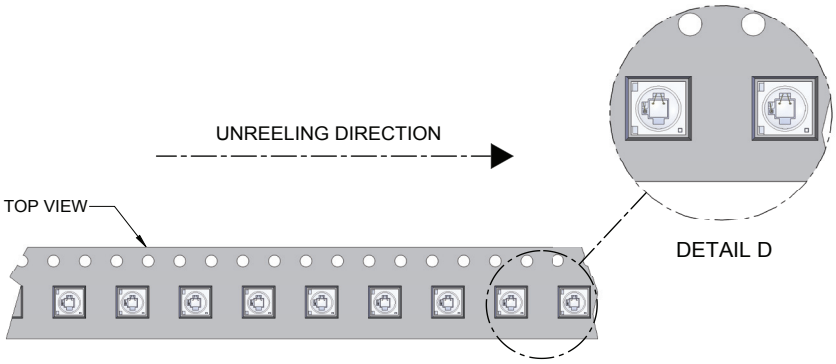

 © 2016 Luminus Devices, Inc. - All Rights Reserved

Luminus Devices, Inc. • T 978.528.8000 • www.luminus.com
175 New Boston Street • Woburn, MA 01801

Soldering Profile

Profile Feature	Sn-Pb Eutectic Assembly	Pb-Free Assembly
Preheat & Soak Temperature min (Tsmin) Temperature max (Tsmax) Time (Tsmin to Tsmax) (ts)	100 °C 150 °C 60-120 seconds	150 °C 200 °C 60-120 seconds
Average ramp-up rate (Tsmax to Tp)	3 °C/second max	3 °C/second max
Liquidous temperature (TL) Time at liquidous (tL)	183 °C 60-150 seconds	217 °C 60-150 seconds
Peak package body temperature (Tp)*	230 °C ~235 °C	255 °C ~260 °C
Classification temperature (Tc)	235 °C	260 °C
Time (tp) within 5 °C of the specified classification temperature (Tc)	20 seconds	30 seconds
Average ramp-down rate (Tp to Tsmax)	6 °C/second max	6 °C/second max
Time 25 °C to peak temperature	6 minutes max	8 minutes max

* Tolerance for peak profile temperature(Tp) is defined as a supplier minimum and a user maximum.
** Tolerance for time at peak profile temperature(tp) is defined as asupplier minimum and a user maximum.

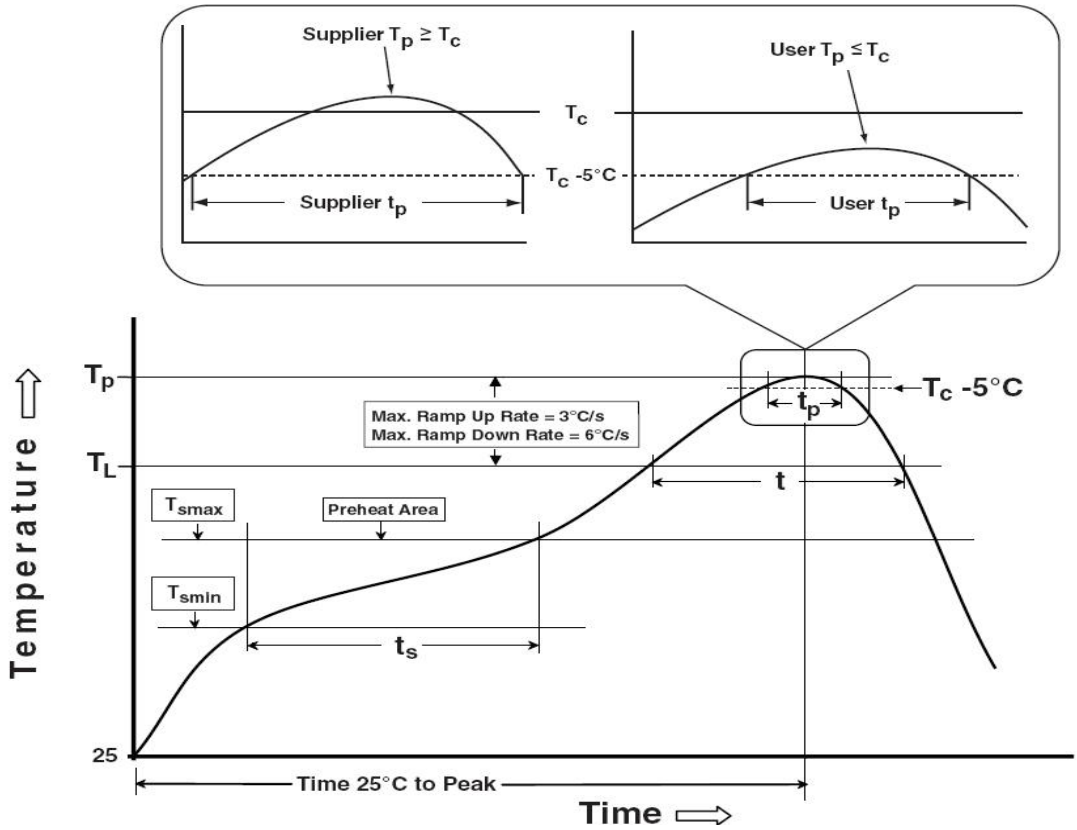

PDS-002674 Rev 01 © 2016 Luminus Devices, Inc. - All Rights Reserved
Luminus Devices, Inc. • T 978.528.8000 • www.luminus.com
175 New Boston Street • Woburn, MA 01801

Precautions for Use

Storage:

1. Before opening the package

The LEDs should be kept at a temperature lower than 40° C and relative humidity lower than 90%. The LEDs should be used within a year. When storing the LEDs, moisture proof package with absorbent material (silica gel) is recommended.

2. After opening the package

The LEDs should be kept at temperature lower than 30° C and relative humidity lower than 60%. The LEDs should be soldered within 168 hours (7days) after opening the moisture proof package.

If unused LEDs remain, they should be stored in moisture proof packages, such as sealed containers with moisture proof package within absorbent material (silica gel). It is also recommended to return the unused LEDs to the original moisture proof package and to seal the moisture proof package again.

If the moisture absorbent material (silica gel) vapors or expires the expiration date, baking treatment should be performed by using the following conditions : 60 °C for 20 hours.

The LEDs electrode and leadframe comprise a silver plated copper alloy. The silver surface may be affected by environments. Please avoid conditions which may cause the LEDs to corrode or discolore. The corrosion or discoloration might lower solderability or affect optical characteristics.

Please avoid rapid transition in ambient temperature, especially in high humidity environments where condensation can occur.

Static Electricity:

1. The products are sensitive to static electricity, and care should be taken when handling them.

2. Static electricity or surge voltage will damage the LEDs. It is recommended to wear a anti-electrostatic wristband or anti-electrostatic gloves when handling the LEDs.

3. All devices, equipment and machinery must be properly grounded. It is recommended that measures be taken against surge voltage to the equipment that mounts the LEDs.

Luminus Devices, Inc. • **T** 978.528.8000 • www.luminus.com
175 New Boston Street • Woburn, MA 01801
 © 2016 Luminus Devices, Inc. - All Rights Reserved

History of Changes

Rev		Description of Change
01	07/12/2016	Initial Release - Production Specifications

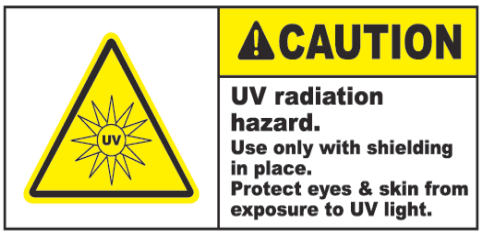

© 2016 Luminus Devices, Inc. - All Rights Reserved
Luminus Devices, Inc. • T 978.528.8000 • www.luminus.com
175 New Boston Street • Woburn, MA 01801